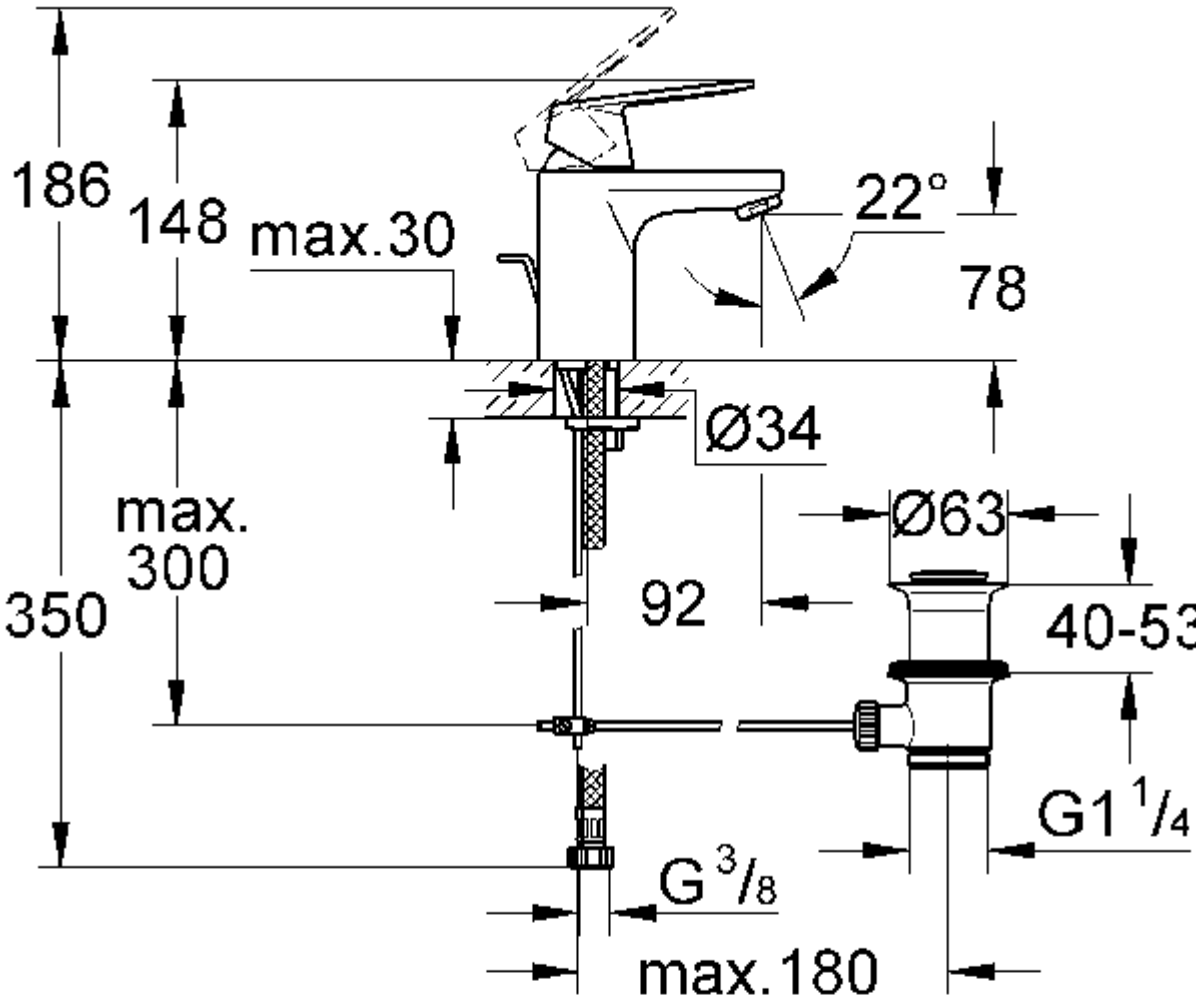
186
148
max.30
22°
78
Ø34
max.
300
350
92
Ø63
40-53
G1 1/4
G 3/8
max.180

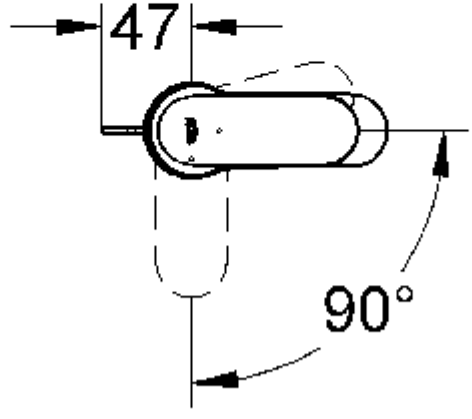
47
90°